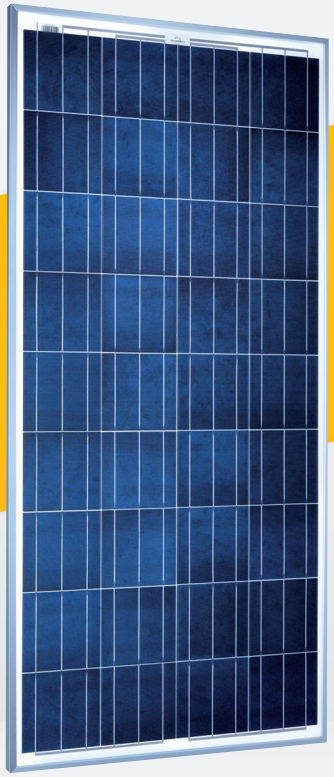

Length	59.37 in (1508 mm)
Width	26.77 in (680 mm)
Height	1.34 in (34 mm)
Frame	Aluminum
Weight	25.02 lb (11.8 kg)

ÖKO-TEST
LIFE WORTH LIVING
SolarWorld
Sunmodule Plus
SW 225 poly
excellent
issue 05/2010

Sunmodule®
SW 130/135/140 poly R6A

World class quality
SolarWorld produces the best products with the highest quality, manufactured according to German and US quality standards in fully-automated ISO 9001 and 14001 certified factories.

Outstanding products
SolarWorld's modules were assessed by the ÖKO-TEST consumer magazine as "excellent".

An experienced industry leader
With over 30 years of experience in off-grid solar applications – SolarWorld delivers top products and technical experience at the highest levels. Our modules are installed in over 100,000 Telecom/Industrial systems worldwide. Nobody else comes close.

SOLARWORLD

We turn sunlight into power.

www.solarworld-usa.com

Sunmodule®

SW 130/135/140 poly R6A

PERFORMANCE UNDER STANDARD TEST CONDITIONS (STC)*

		SW 130	SW 135	SW 140
Maximum power	P_{max}	130 Wp	135 Wp	140 Wp
Open circuit voltage	U_{oc}	21.5 V	21.9 V	22.1 V
Maximum power point voltage	U_{mpp}	17.4 V	17.7 V	18.0 V
Short circuit current	I_{sc}	7.99 A	8.16 A	8.35 A
Maximum power point current	I_{mpp}	7.49 A	7.69 A	7.85 A

*STC: 1000W/m², 25°C, AM 1.5

PERFORMANCE AT 800 W/m², NOCT, AM 1.5

		SW 130	SW 135	SW 140
Maximum power	P_{max}	94.6 Wp	98.2 Wp	102.1 Wp
Open circuit voltage	U_{oc}	19.8 V	19.8 V	20.0 V
Maximum power point voltage	U_{mpp}	15.8 V	16.0 V	16.3 V
Short circuit current	I_{sc}	6.44 A	6.58 A	6.73 A
Maximum power point current	I_{mpp}	5.99 A	6.15 A	6.28 A

Minor reduction in efficiency under partial load conditions at 25°C: at 200W/m², 95% (+/-3%) of the STC efficiency (1000 W/m²) is achieved.

COMPONENT MATERIALS

Cells per module	36
Cell type	Poly crystalline
Cell dimensions	6.14 in x 6.14 in (156 mm x 156 mm)
Front	tempered glass (EN 12150)

SYSTEM INTEGRATION PARAMETERS

Maximum system voltage SC II	1000 V
Maximum reverse current	12 A
Increased snowload acc. to IEC 61215	5,4 kN/m²
Number of bypass diodes	2

THERMAL CHARACTERISTICS

NOCT	46 °C
TC I_{sc}	0,034 %/K
TC U_{oc}	-0,34 %/K
TC P_{mpp}	-0,48 %/K

ADDITIONAL DATA

Power tolerance	+/- 5 %
J-Box	IP65
Maximum outer cable diameter	0.31 in (7,8 mm)
Maximum wire cross section	0.006 in² (4 mm²)

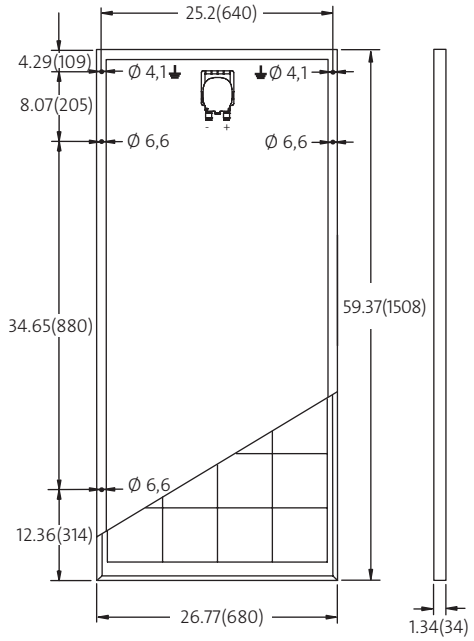

www.tuv.com TÜVRheinland ID: 0000024137

- Qualified, IEC 61215
- Safety tested, IEC 61730
- Periodic Inspection

FOKUS TEST 06/10 Ammoniakbeständigkeit

SolarWorld AG reserves the right to make specification changes without notice. This data sheet complies with the requirements of EN 50380.