LG
Life's Good

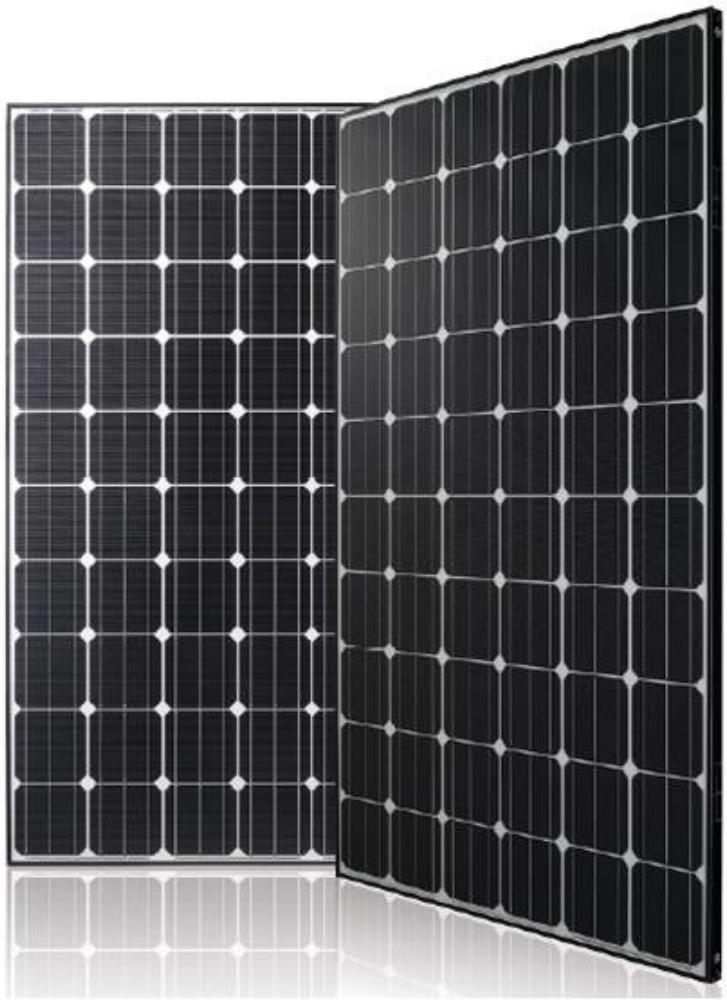

Monocrystalline Solar Module
LGXXXN1C(W)-G3

Installation Instructions

※ **A minimum slope of 5 in/ft. for installation over a roof, is required to maintain the fire class ratings. The array frame shall be grounded in accordance with NEC Article 250.**

Table of Contents

CONTENTS

1. Safety 2

2. Before & After Installation 3

3. Electrical Installation 4

4. Mechanical Installation 5

5. Product Specifications 8

6. Disclaimer of Liability / Disposal 9

7. Transporting and Storage 9

8. Appendix 10

Revisions Table

Date	Version	Description of change	Remark
2012.08.01	1.0 (1st edition)		
2012.12.03	2.0	Drawing Change	
2013.02.15	3.0	Revision and supplementation of standards information	
2013.04.20	4.0	Add description of Mechanical Installation	
2013.06.10	5.0	Add product specifications of NeoN-i Model	
2013.06.25	6.0	Add Appendix Contents	

Safety

The instructions related to safety and use indicated in the this installation manual are intended for the prevention of unexpected danger, damage, or failure.

⚠ DANGER **⚠ WARNING** **⚠ CAUTION**

Non-compliance with the instructions may cause product damage, product failure, and/or serious bodily injury or death.

⚠ DANGER

① Do not contact electrically active parts of the panel, such as terminals, without appropriate safety gear. Contact may result in lethal spark or electric shock.

② Do not use or install if the module is broken or torn. Failure to comply may result in electric shock.

⚠ WARNING

① Perform all work in dry conditions and use only dry tools. Do not handle wet panels without appropriate protection equipment. Failure to comply may result in accident or death. accident or death.

② Damaged modules must be treated with safety protection equipment. Failure to comply may result in serious bodily injury or death.

③ Do not approach the damaged or broken module unless you are an authorized or qualified expert. Failure to comply may result in serious bodily injury or death.

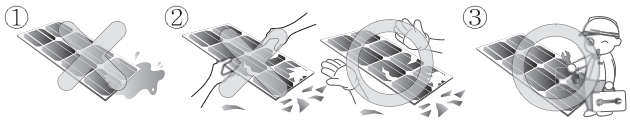

⚠ CAUTION

① Use proper equipment, connectors, wires and buttresses for the installation of the module. Failure to comply may result in product damage, product failure or bodily injury.

② Installation during rain, heavy wind or snowy day may result in bodily injury or death.

③ Holes in the frame or glass of the module may decrease the strength of the frame or break the glass.

④ Do not touch the glass surface or frame of the solar module after installation of the module. It may result in injury or death.

⑤ Heavy objects must be kept off of the solar module. Do not stand on or step on the module. Do not drop the module. Failure to comply may result in product damage, product failure or bodily injury.

⑥ Do not scratch the coating surface of the frame. Scratches may decrease the total solar output due to corrosion of the frame.

⑦ Do not artificially concentrate sunlight on the solar module surface. Failure to comply may result in product damage or failure.

⑧ Do not apply a shock to the junction box of the module or pull the cable. Do not remove the labels attached to the module. Failure to comply may result in damage of the product.

⑨ If the installing modules on curved surface, (e. g. arch type), as shown in the below picture, do not forcefully modify the module in the installation when connecting it with the structure. Only install the module in the place where the structure for the panels has been properly set up. An improper structure may cause deformation of the panels. Panels may also be damaged by unapproved installation methods such as the use of a crane.

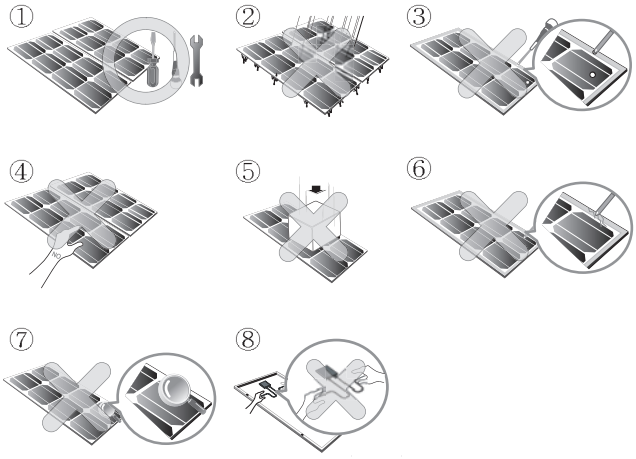

⑨

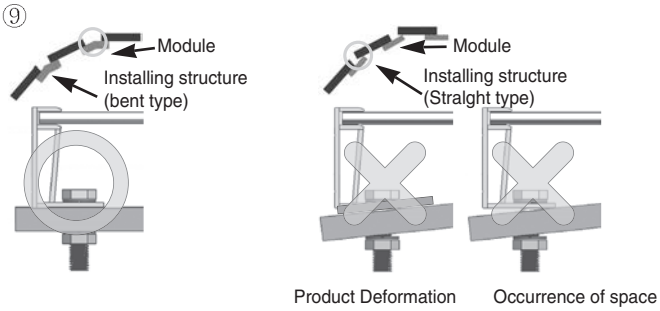

Before & After Installation

Before Installation

Please carefully read this manual before installation.

- Contact with electrically active parts of the panels, such as terminals, may result in burns, sparks and lethal shock whether the panel is connected or disconnected.
- Panels produce voltage even when not connected to an electrical circuit or load.
- Solar module installation and maintenance must be performed by qualified and authorized installer.
- All installation instructions should be read and understood before performing any installation.
- Do not twist, pull, or scratch the cable attached to the solar module.
- Do not touch the solar module with bare hands. Failure to comply may result in a serious burn or injury.
- Do not drop the solar module or place weight on a solar module.
- Do not disassemble the solar module.
- After installation or repair, check that the solar module are operating properly.
- In the event that the currently used solar module or parts have been replaced the newly replaced module and parts must have the same model name and parts as the previously installed solar module.
- Secure all necessary permits and licenses to install the solar modules
- Only qualified and authorized individuals are permitted to treat electrical parts, when there is a breakage, failure or damage of the product or damage of the product.
- Do not use or install broken modules; Failure to comply may result in fire, electric shock, and injury.
- Do not install the module horizontally. Failure to comply may result in excess dirt or white efflorescence (glass disease).
- Panels are not intended for use indoors or on moving vehicles of any kind.
- Reflection from external environments such as snow Reflection from external environments such as snow, water or other surfaces may increase the power generated by the panel.
- Industry standard rated specifications are made at conditions of 1000W/m 2 irradiance and 25 °C (77ºF) solar cell temperature. Colder temperatures may substantially increase voltage and power.
- Keep the solar module and system away from children at all times.
- Keep the module packed in the carton until the time of installation.
- Keep flammable gasses away from the installation site.
- Do not work alone. Please work as part of a team of two or more people.
- Safety harness use is strongly recommended for installation.
- Partial shadowing may substantially reduce panel and system output.
- Care must be taken to avoid low tilt angles which may cause dirt to buildup on the glass against the frame edge.
- Dirt build-up on the surface of the panel may cause active solar cells to be shaded and electrical performance to be impaired.
- Always keep the back surface of the panel free from any foreign objects or structural elements which could come into contact with the panel.

After Installation

- Plug in the connector tightly and ensure that the wiring properly works.
- Conduct periodic inspection of the panels for damage to front glass, back sheet, frame, junction box, or external electrical connections.
- Check electrical connections for loose connections and corrosion.
- Removal of dirt from the front glass can increase output.
- Water, ethanol or a conventional glass cleanser with a micro-fiber cloth can be used for regular washing or rinsing of the front glass to remove dust, dirt or other deposits.
- Aggressive and abrasive cleansers or chemicals such as alkali chemicals including ammonia based solution should not be used on cleaning the module.
- Always wear rubber gloves for electrical insulation while maintaining, washing or cleaning panels.
- Deposits of foreign material on the frame surface can be cleaned by using a wet sponge or cloth and dried in air or by using a clean chamois.
- Perform the wiring work by connecting the connector and wires to the stand away from the roof or ground.

Electrical Installation

Danger

- Avoid all electrical hazards when installing, wiring, operating and maintaining all panels.
- Do not connect panels that have different electrical properties or physical configurations in the same system.
- Match the polarities of cables and terminals when making the connections; failure to do so may result in damage to the panel.
- The rating of the over-current device shall not exceed the maximum series fuse rating marked on the name plate.
- The panel contains factory installed bypass diodes located inside the junction box.
- When installing the system, it is recommended to install a lightning rod to protect the system.

Electrical Installation

- The junction box should not be opened. Opening the junction box will void the warranty.
- Panels with a suspected electrical problem should be returned to LG Electronics for inspection and possible repair or replacement as per the warranty conditions provided by LG Electronics

Electrical Connections

- Shock hazard may occur near the solar modules electrical connections.
- Modules may be connected in series and/or parallel to achieve the desired electrical output as long as it is within the guidelines on the product specification sheet.
- Please use only the same type of modules in a combined source circuit.
- Do not disconnect the module under when it is operating.
  Shock hazard may occur near the solar modules connection means.

Diodes

- All LG modules are equipped with factory installed bypass diodes. The factory-installed diodes provide proper circuit protection for the systems within the specified system voltage.

I_F (AV)	2X7.5A
V_F (max)	0.84V
V_{RRM}	45V
T_j (max)	175℃
R_{TH}	1.7℃/W

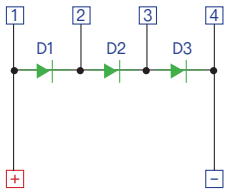

Series Connection

- The solar modules may be wired in series to produce the desired voltage output.
- The current of each module connected in series should be the same.
- The maximum number of series connected modules can be determined by basis on max system voltage, the 125% safety factor not explained in specifications, and the module Voc which can be checked in Product Specifications in this document.

→**<u>Do not exceed 80%</u>** of maximum system voltage.

- Maximum Module configuration (recommend) : refer to the 'Product Specification' in this manual.

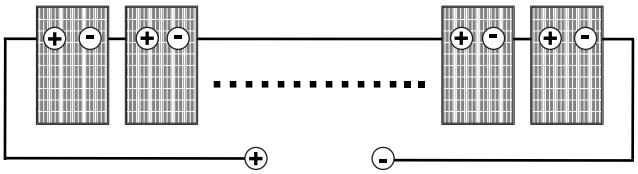

Series connection for more voltage

Parallel Connection

- The solar modules may be combined in parallel to produce the desired current output.
- When modules are combined in parallel, the total current is equal to the sum of currents from each module.
- The voltage of each module connected in parallel should be the same.
- When connecting plural strings of modules in parallel every series string or solar module must be fused prior to combining with other strings.
- Abide with all applicable federal, state, and local codes for additional fusing requirements and limitations on the maximum number of solar modules in parallel.
- Maximum parallel strings without proper measures, e. g. fuse 20A : 1 string
- Parallel configuration is not limited if proper measures are taken to block the reverse current flow, e.g. fuses for the protection of the module and cables from over-current for prevention of unbalanced string voltage.
- A multiplying factor is required for increased output of the PV modules. Under normal conditions, a PV module is likely to experience conditions that produce more current and/or voltage than reported at standard test conditions. The requirements of the National Electrical Code (NEC) in Article 690 shall be followed to address these increased outputs. In installations not under the requirements of the NEC, the values of Isc and Voc marked on this PV module should be multiplied by a marked on this PV module should be multiplied by a factor of 125% when determining component voltage ratings, conductor ampacities, fuse sizes, and size of controls to the PV output.
- Depending on national directives, additional safety factors might be applicable for overcurrent protection.

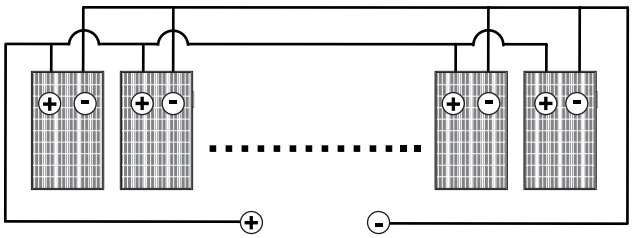

Parallel connection for more current

Electrical Installation

General Wiring

- LG Electronics recommends that all wiring be double insulated with a minimum rating of 90°C (194°F).
- All wiring should use a flexible copper (Cu) conductor.
- The minimum size should be determined by the applicable codes.
- LG Electronics recommends a size no smaller than 12AWG.

Earth Grounding

- All work must be conducted in conformance with all Federal, State, and local codes and standards.
- Grounding works should be performed by an authorized installer for the safety and maintenance of the system in accordance with all national, state and local electrical codes and regulations and standards.
- Specific information on the solar module dimensions and location of grounding holes is provided in “Product Specifications”.
- One M4 stainless steel bolt, one nut, one spring washer two flat washers one cup washer one star washer and 12 AWG Cu wires are recommended per mounting hole.
- Where common grounding hardware (nut, bolts, washers) is used to attach a listed grounding device, the attachment must be made in conformance with the grounding device manufacturer’s instructions.
- There is an earth hole on the edge of the module frame Using this hole an earth conductor and the solar module frame may be recommended to be connected and earthed as the below drawing.
- All screws and nuts shall be tightened to a torque of 4~5 Nm.
- A module with exposed conductive parts is considered to be in compliance with UL 1703 only when is electrically grounded in accordance with the instructions presented below and the requirements of the National Electrical Code.

The installation instructions shall include:

1. Details for wiring shall comply the NEC Article 690.
2. Details for the grounding method of the frame of arrays shall comply with the NEC Article 250.
3. CNL model instruction manuals shall also include a statement that installation shall be in accordance with CSA C22.1, Safety Standard for Electrical Installations, Canadian Electrical Code, Part 1.

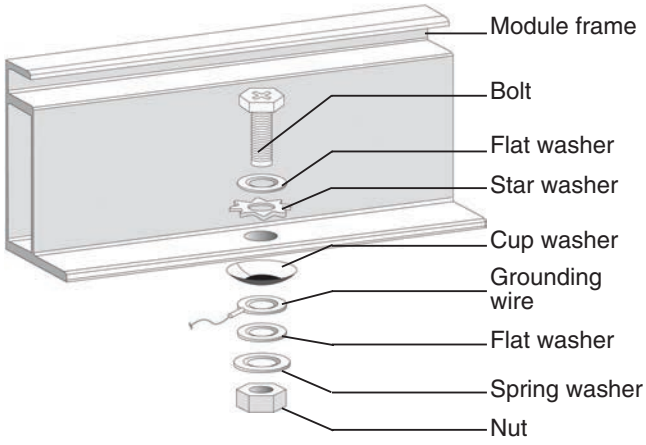

Mechanical Installation

Module Mounting

- The LG Electronics’ (LGE) Limited Warranty for solar modules is contingent upon modules being mounted in accordance with the requirements described in this section.
- Any module without a frame (laminate) shall not be considered to comply with the requirements of UL 1703 unless the module with hardware that has been tested and evaluated with the module under this standard or by a field inspection certifying that the installed module complies with the requirements of UL 1703.

Site Consideration

LGE solar modules should be mounted in a location that meets the following requirements.

Operating Temperature

- Maximum Operating Temperature: +90°C (194°F)
- Minimum Operating Temperature: -40°C (-40°F)

Design Strength

- LGE solar modules are certified to basic loads 50lb/ft2 (about 2400 Pa).

Excluded Operating Environments

- The solar modules from LG Electronics can not be operated in a location where they could come in direct or indirect contact with salt water or ammonia.

Mechanical Installation

Mounting Methods

General Information

- Select the appropriate orientation to maximize sunlight exposure.
- Module should not be mounted or stored in a way that the front/top glass faces downward in order to prevent water from entering the junction box, which could cause a safety hazard.
- Clearance between the solar module frames and structures such as roofs or ground is required to prevent wiring damage and to allow air to circulate behind the solar module. The recommended standoff height is a minimum of 100mm
- When installed on a roof, the solar module must be mounted over a fire-resistant roof covering rated for the application. The fire resistance of the solar module is class C after ANSI/UL790.
- The solar module is only IEC listed for use when its factory frame is fully intact.
- Removal or alteration must be done by an authorized and qualified individual
- Creating additional mounting holes may damage the solar module and reduce the strength of the frame.
- We recommend a 6mm gap between module frames to avoid tension from thermal expansion.
- The fire rating of this module is valid only when mounted in the manner specified in the mechanical mounting instructions.
- The module is considered to be in compliance with UL1703 only when the module in mounted in the manner specified by the mounting instructions below.
- The solar module may be mounted by using the following methods: (*Torque:8~12Nm)
- When installing modules in heavy snow areas, it is recommended to be taken an appropriate countermeasure to prevent possible damages to the lower side frame by slipping snow .
  (e.g. attach supporting part to the lowest modules)

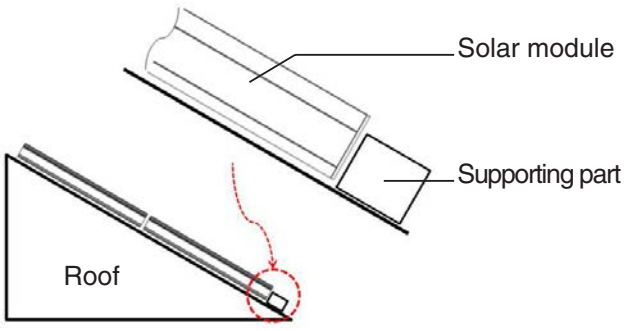

Mounting by using frame bolts holes

- Secure the solar module to the structure by using the factory mounting holes.
- Four M6 stainless steel bolts, four nuts, four spring washers, and eight flat washers are recommended per solar module.
- The module may be fastened to a support by using both the outer and inner bolt holes of the frame.
- Each module should be securely fastened at a minimum 4 points on two opposite sides.
- Specific information on the solar module dimensions and location of mounting holes is provided in ‘Product Specifications’.

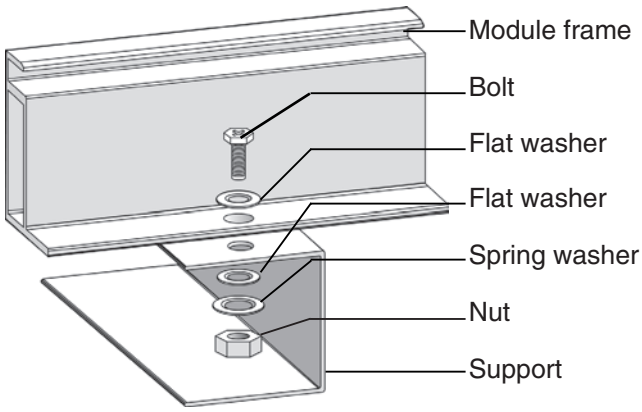

- Tighten the bolt securely by using the combination shown above. Place the spring washer between the Flat washer and Nut.

Mounting by using clamps

- The module may be fastened to a support by using clamps on both the long edge and the short edge of the modules.
- Specific information on the solar module dimensions and location of clamping is provided in ‘Product Specifications’.

Mechanical Installation

	LGXXXN1C(W)-G3
Mounting Type	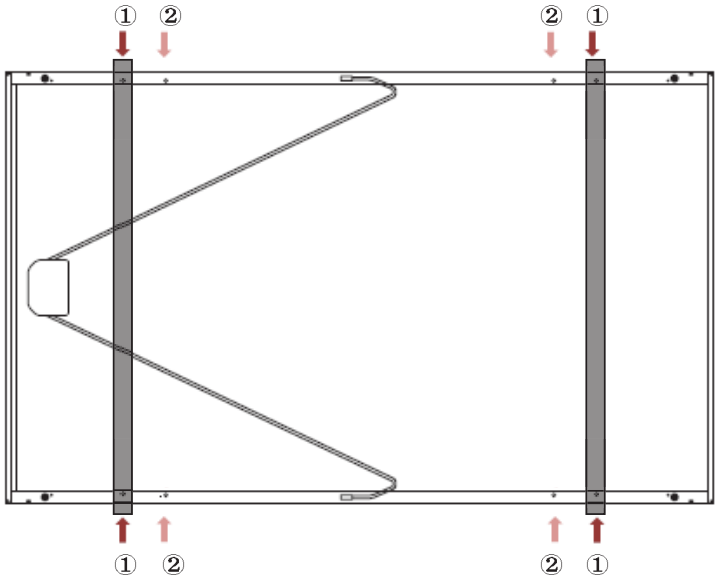 Use four mounting holes on two opposite sides.
Clamping Type (Long Side)	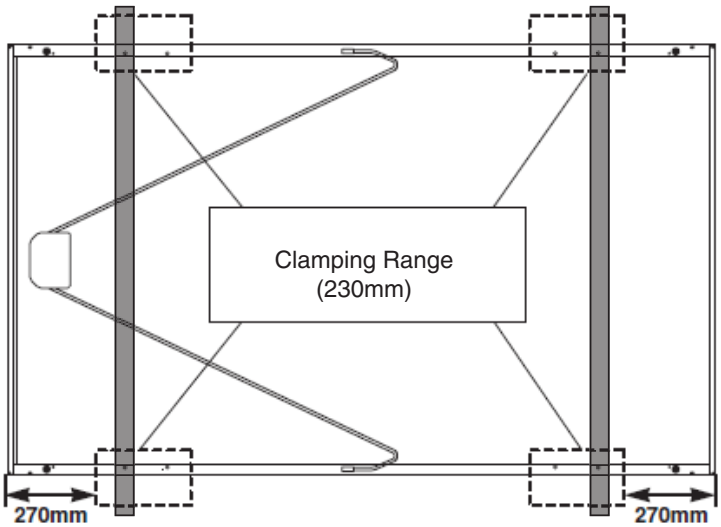 Use four clamps on the long frame.
Clamping Type (Short Side)	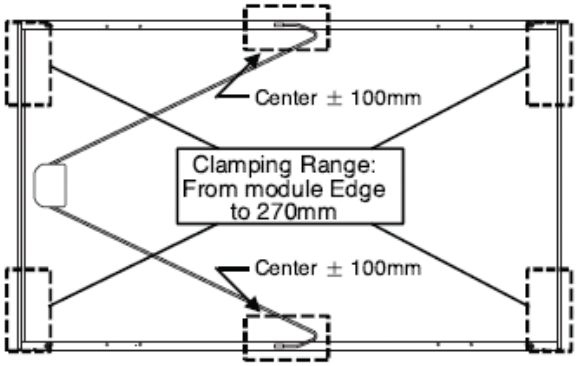 Use four clamps on the short frame and two clamps at the center of long Frame.
	This method is not tested by IEC/UL. 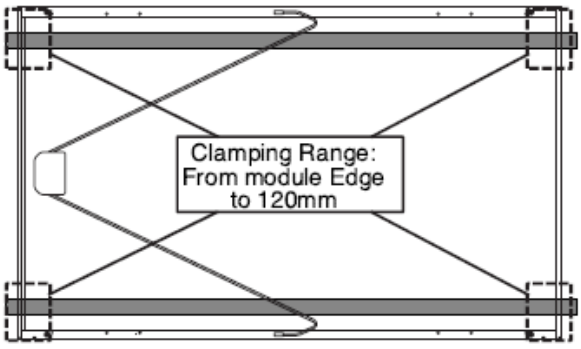 Use four clamps on the Short frame. This installation is allowed in the following cases: 1. Slope roof: If module is installed parallel to the rooftop. 2. Flat roof: If installed with an additional stand such as wind shield or deflector.

Product Specifications

- Electrical and Mechanical Properties
(Rated electrical characteristics are within 10 percent)
Standard Test Condition(STC) : Irradiation 1,000W/m², Cell temp. 25°C, 1.5AM

		Certifi cates	Electrical Properties									Mechanical Properties					Other
Module Series	Model Name	IEC61215 Ed.2, IEC 61730, Safety Class II, CE, ISO9001	Pmax at STC	Power Tolerance	Voc at STC	Isc at STC	Vmpp at STC	Impp at STC	*Efficiency Reduction	Max. System voltage	Max. No. of modules in series	*Connector	Length	Width	Height	Weight	Max. Series fuse
			W	%	V	A	V	A	%	V			mm	mm	mm	kg	A
LGXXXN1X-G3	LG270N1C(W)-G3	Yes	270	3%	38.57	9.31	31.21	8.74	<4.5	600	12	MC4	1640	1000	35	16.8	20
	LG275N1C(W)-G3	Yes	275	3%	38.72	9.44	31.36	8.85	<4.5	600	12	MC4	1640	1000	35	16.8	20
	LG280N1C(W)-G3	Yes	280	3%	38.87	9.56	31.49	8.97	<4.5	600	12	MC4	1640	1000	35	16.8	20
	LG285N1C(W)-G3	Yes	285	3%	39.02	9.68	31.62	9.09	<4.5	600	12	MC4	1640	1000	35	16.8	20
	LG290N1C(W)-G3	Yes	290	3%	39.17	9.80	31.75	9.19	<4.5	600	12	MC4	1640	1000	35	16.8	20
	LG295N1C(W)-G3	Yes	295	3%	39.32	9.94	31.83	9.34	<4.5	600	12	MC4	1640	1000	35	16.8	20
	LG300N1C(W)-G3	Yes	300	3%	39.47	10.05	31.97	9.46	<4.5	600	12	MC4	1640	1000	35	16.8	20

Note : *Relative efficiency reduction by respect to irradiance
*MC4 formal name : PV-KST4 / 6II-UR, PV-KBT4 / 6II-UR

- Dimensions of Modules

LGXXXN1C(W)-G3

Unit: mm / in.

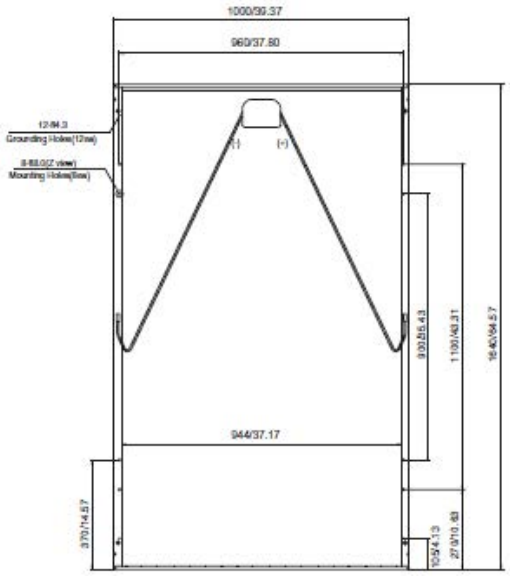

Cross-sectional drawings

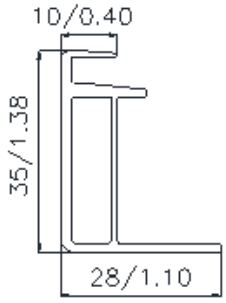

Long side frame

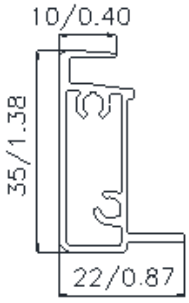

Short side frame

Note :*Holder is for the convenient connection of junction box cable,but that does not warranty if it is broken after installed.

Disclaimer of Liability / Disposal

Disclaimer of Liability

- By beginning the installation process the installer represents the he/she has read and completely understands this Installation Manual. He/She further represents if he/she had any questions regarding this installation manual he/she would have contacted LG with any questions or concerns. By installing an LG Solar module, I discharge, and cove nant not to sue LG, its affiliated companies, successors, or assigns, its administrators, directors, agents, officers, volunteer and employees, other participants in any activity connected to installation, operation, or service of LG Solar Modules and if applicable from all liabilities claim Solar Modules, and if applicable, from all liabilities, claims, demands, losses, or damages on my account caused or alleged to be caused in whole or in part by the negligence of the LG its affiliated companies, successors, or assigns, its administrators, directors, agents, officers, volunteer and employees.

Disposal

- Please contact us, if you have any queries related to the disposal or recycling of solar modules from LG Electronics.

Transporting and Storage

- Do not loosen the banding, when the module is transported by truck, ship and etc.
  In case of loose banding, the module will be shaken, which may cause damage.
- Do not stack more than three pallets.
  Severe stacking can cause stress to the module and may cause product damage.

Appendix

WILEY Compatibility

• LG modules have been confirmed by Burndy LLC that the below model number designations have been evaluated with the Burndy WEEB line of products :

LGxxxS1C-G3, LGxxxS1K-G3, LGxxxN1C-G3, LGxxxS1C-A3, LGxxxS1K-A3

- WEEBs

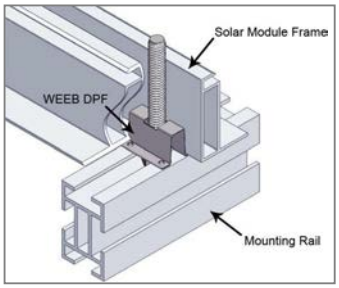

WEEB-DPF

- Grounding Lugs

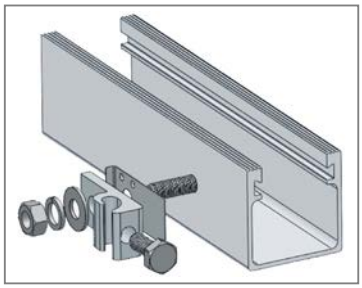

LUG 6.7

- Cable Clips

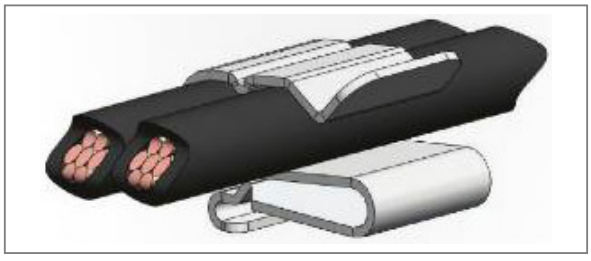

ACC-R2

Important Notes

1. The NEC section 690.43 states, “Exposed non-current carrying metal parts of module frame, equipment and conductor enclosures shall be grounded in accordance with 250.134 or 250.136(A) regardless of voltage”
2. Use general purpose anti-seize compound on fastener threads when installing WEEBs.
3. WEEBs are intended for SINGLE USE ONLY. Functionality will not be guaranteed if reused.

LG Electronics U.S.A Inc.
1000 Sylvan Ave, Englewood Cliffs, NJ 07632
Contact : lg.solar@lge.com
http://www.lgsolarusa.com

This document is subject to change without notice.
LG, LG logo and Life's Good are trademarks of LG Electronics, Inc. worldwide. Trademarks and intellectual properties of LG Electronics, Inc. are protected by international copyright laws.

Document : II-N-UL-V6-EN-201306